DiamondBack Truck Covers

SIDE BOXES

(800) 935-4002 | DIAMONDBACKCOVERS.COM

INSTALLATION GUIDE

AX-11

20 minutes
Normal Install Time

Keep an eye out for these icons:

IMPORTANT!
Important installation information

Helpful Hints
Tips to assist installation

PARTS INCLUDED:

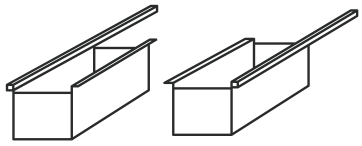

Side Boxes (2)

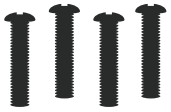

5/16" x 2-1/2" Button-Head Bolts (4)

5/16" Foam Washers (4)

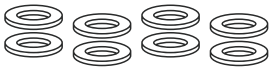

5/16" Stainless Washers (8)

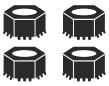

5/16" Lock Nuts (4)

TOOLS REQUIRED:

4" C-Clamp

Drill

5/16" Bit

Ratchet Wrench

1/2" Socket

3/16" Hex Key

PRE-INSTALLATION NOTE:

You must install your DiamondBack cover prior to installing the Side Boxes. Refer to the **DiamondBack HD/SE** or **270 Installation Guide** for details.

MOUNT THE FIRST BOX

1 Remove both access panels of the cover by detaching their gas springs, tilting the panels past 90 degrees, and sliding them off their hinges.

2 Set one **Side Box** under the cover so that:

a. its square tube arm is underneath the center panel,

b. its support flange is on the bed rail, and

c. its rear edge is tight against the center-panel gutter.

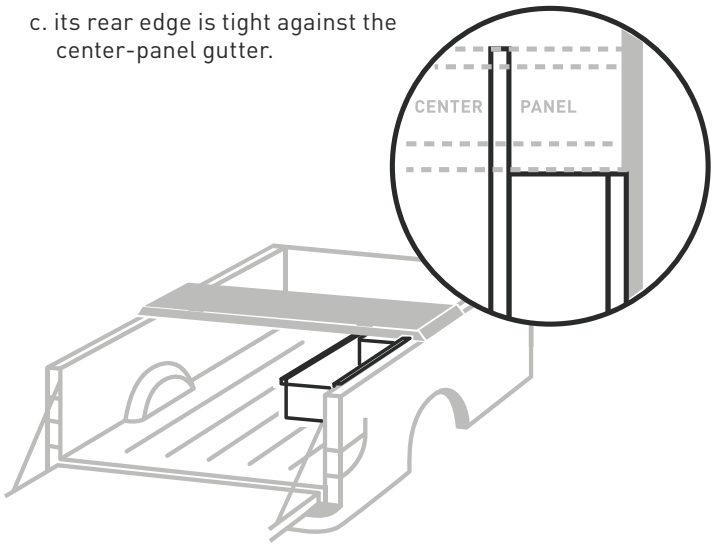

3 Clamp the square tube arm in place.

4 Drill down through the center-panel gutter closest to the box and through the square tube arm using a 5/16" bit.

Locate this hole as far toward the box as possible.

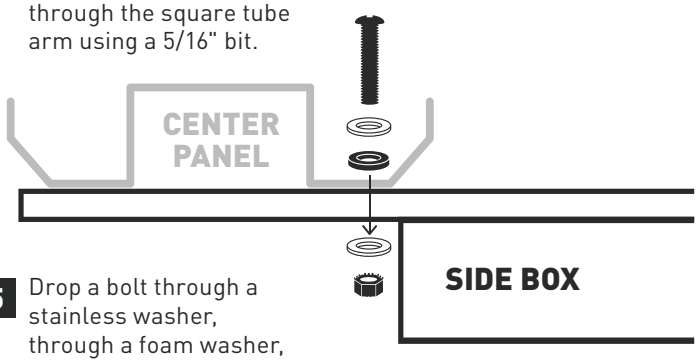

5 Drop a bolt through a stainless washer, through a foam washer, and into the new hole.

6 Put a stainless washer and lock nut onto the bolt end. Tighten the lock nut with a 1/2" socket and 3/16" hex key.

Do not crush the square tube arm.

7 If you plan to mount the second box on the opposite side of the truck, finish installing the first box by repeating steps 4–6 at the far end of its square tube arm, through the other center-panel gutter.

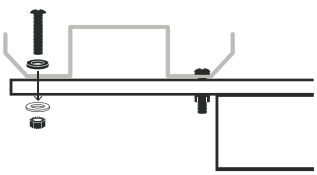

If you plan to mount the second box inline with the first, skip to step 9.

CONTINUED ON REVERSE →

MOUNT THE SECOND BOX

8 To mount the second box on the opposite side of the truck, repeat steps 2–7, then skip to step 13.

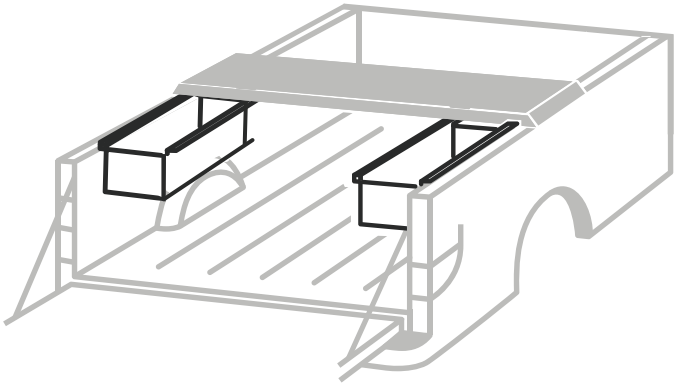

9 To mount the second box inline with the first, repeat steps 2–6.

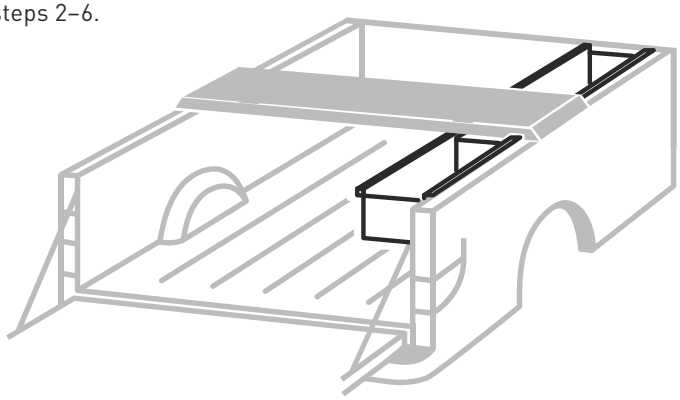

★ The boxes' square tube arms should pass by and align with each other under the center panel. (One box is slightly narrower than the other.)

10 Drill two holes that travel through both arms using a 5/16" bit.

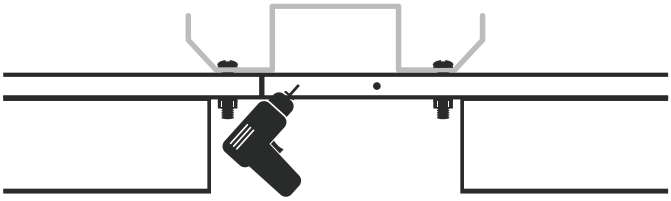

11 Insert a bolt through each new hole.

! Point the bolt ends toward the bed rails.

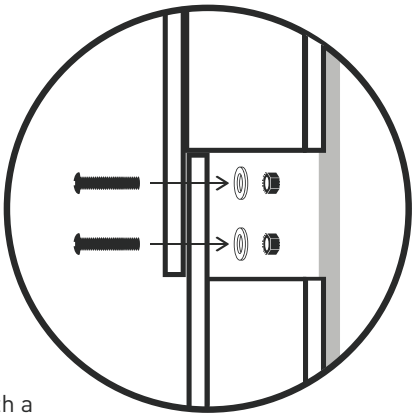

12 Put a plain washer and lock nut onto each bolt. Tighten each lock nut with a 1/2" socket and 3/16" hex key.

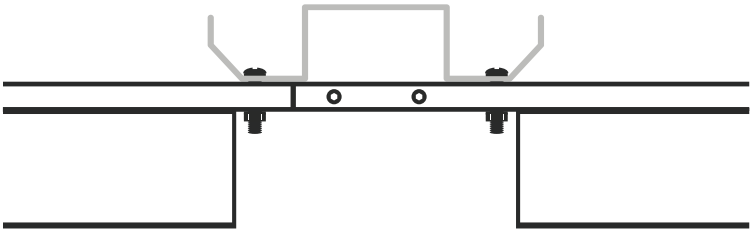

13 Reattach the access panels of the cover by tilting them past 90 degrees, fully mating their hinges, and reattaching their gas springs.
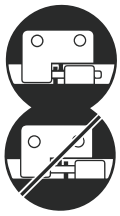
! To avoid hinge damage, make absolutely sure the hinges are fully mated before bringing a panel back into the closed